Gym Name	Big Community Gym	Gym Code	
Revision	01	Surfacing	Optional
Date	25/07/2018	Scale	1:50@A3
Drawn By	SK	Notes:	
Checked By			

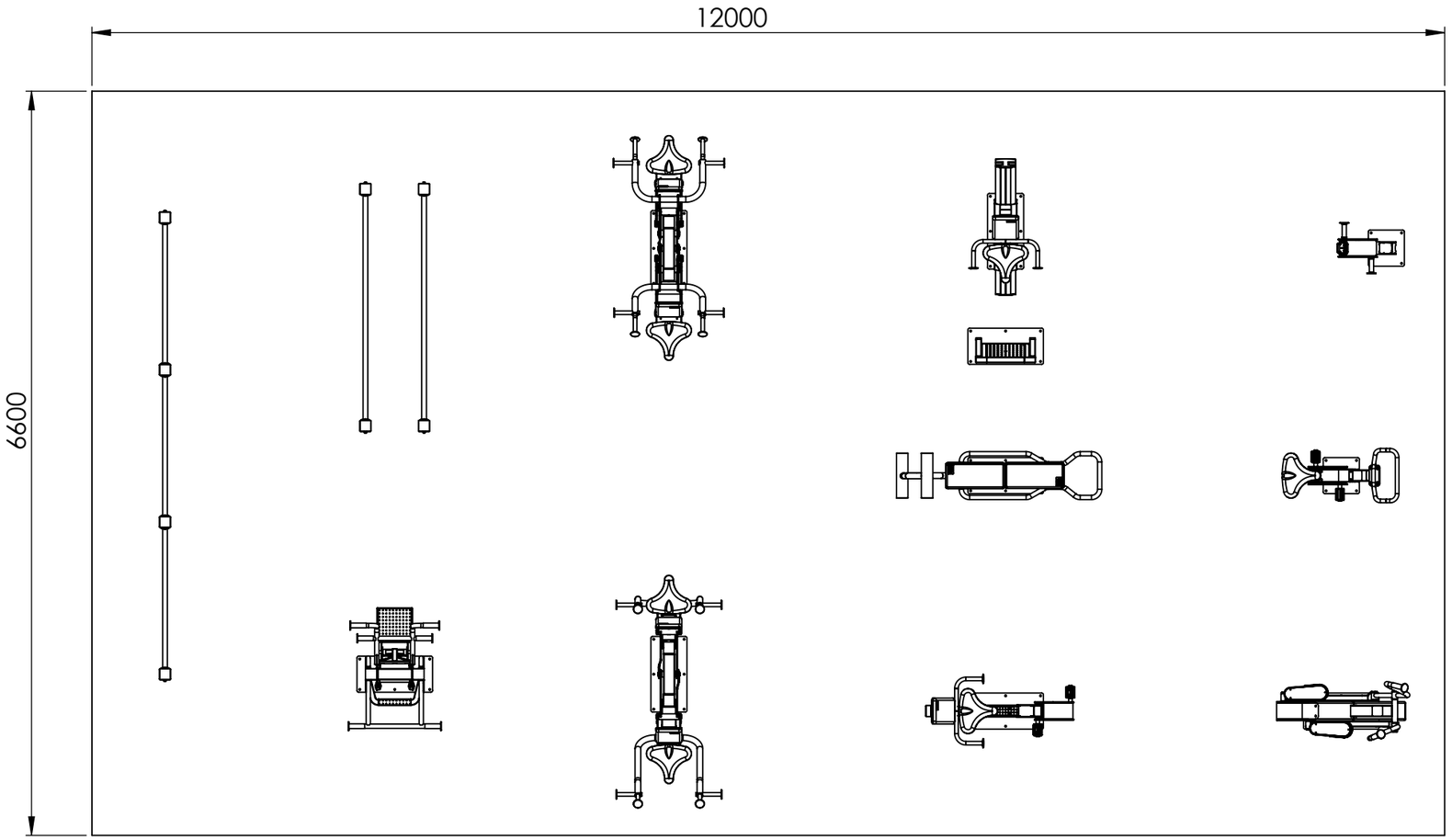

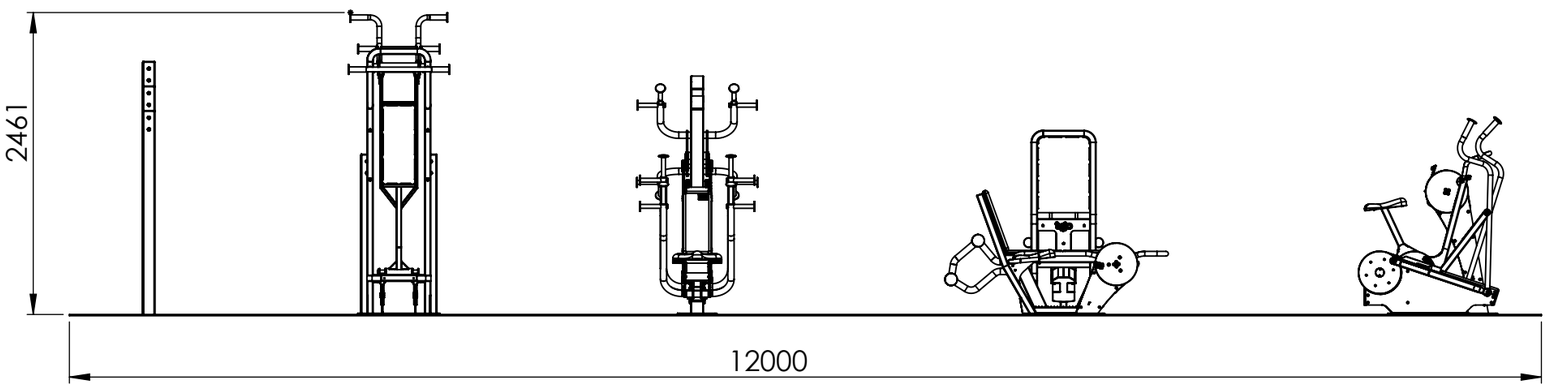

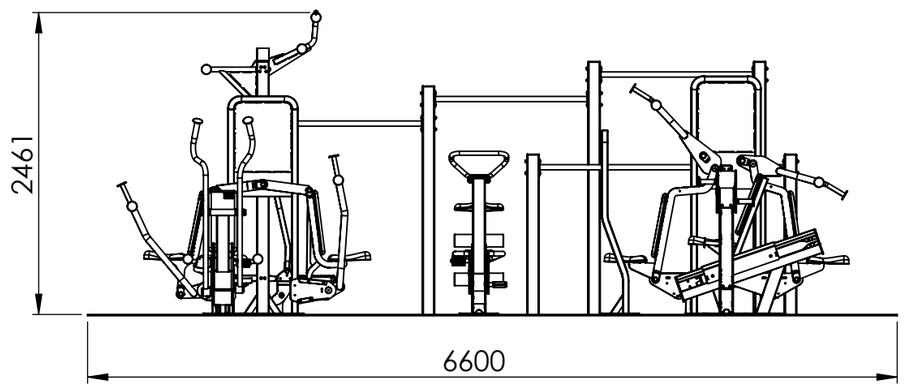

Phone: +44 (0)1795 373301
Email: info@tgogc.com
Address: The Old Dairy,
Brogdale Farm
Brogdale Road,
Faversham
Kent,
ME13 8XZ
UK

IMPORTANT

- THIS INSTALLATION DRAWING IS MADE TO EN16630 STANDARDS
- DIMENSIONS ARE IN MILLIMETRES & FEET - INCHES UNLESS STATED OTHERWISE
- MINIMUM 1500 SAFETY CLEARANCE REQUIRED BETWEEN GYM STATIONS & ALL INVADING OBSTACLES
- ALL TGO EQUIPMENT DIMENSIONS ARE MEASURED FROM THE CENTRE POINT OF BASE PLATES
- ENSURE YOU HAVE READ THE MOST RECENT EDITION OF THE 'TGOGC INSTALLATION AND ASSEMBLY GUIDELINES' AND RELEVANT 'TGOGC PRODUCT CARDS' PRIOR TO INSTALLATION OF THIS GYM
- ANY DISCREPANCIES ARE TO BE REPORT TO TGOGC
- ALTERNATIVE SURFACING OPTIONS ARE AVAILABLE

25 YEAR WARRANTY

MADE IN BRITAIN